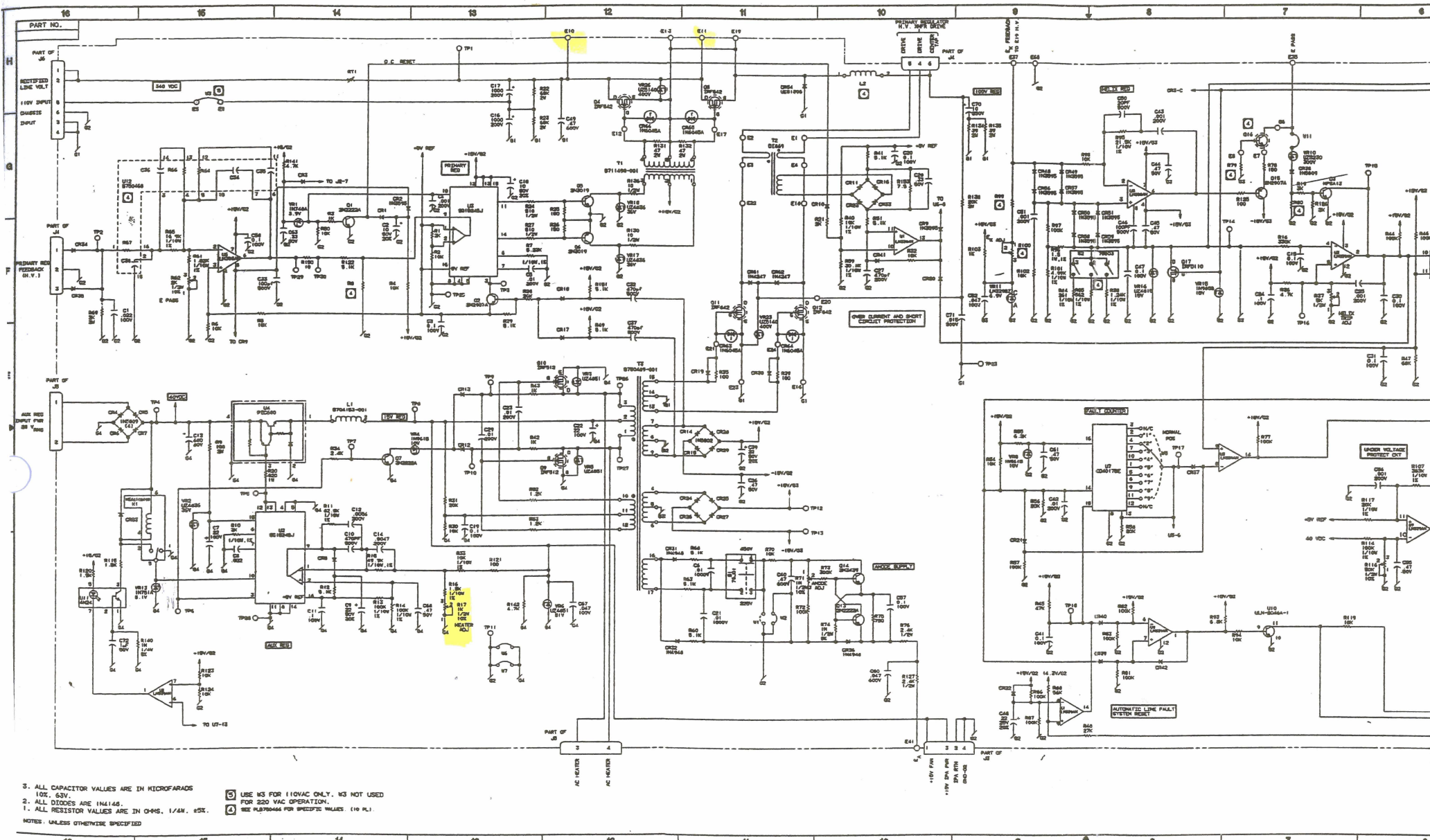

3. ALL CAPACITOR VALUES ARE IN MICROFARADS 10%, 63V.
2. ALL DIODES ARE 1N4148.
1. ALL RESISTOR VALUES ARE IN OHMS, 1/4W, ±5%.

NOTES, UNLESS OTHERWISE SPECIFIED

5 USE W3 FOR 110VAC ONLY. W3 NOT USED FOR 220 VAC OPERATION.

4 SEE PL8780466 FOR SPECIFIC VALUES. (10 PL).

R-16
1.5K

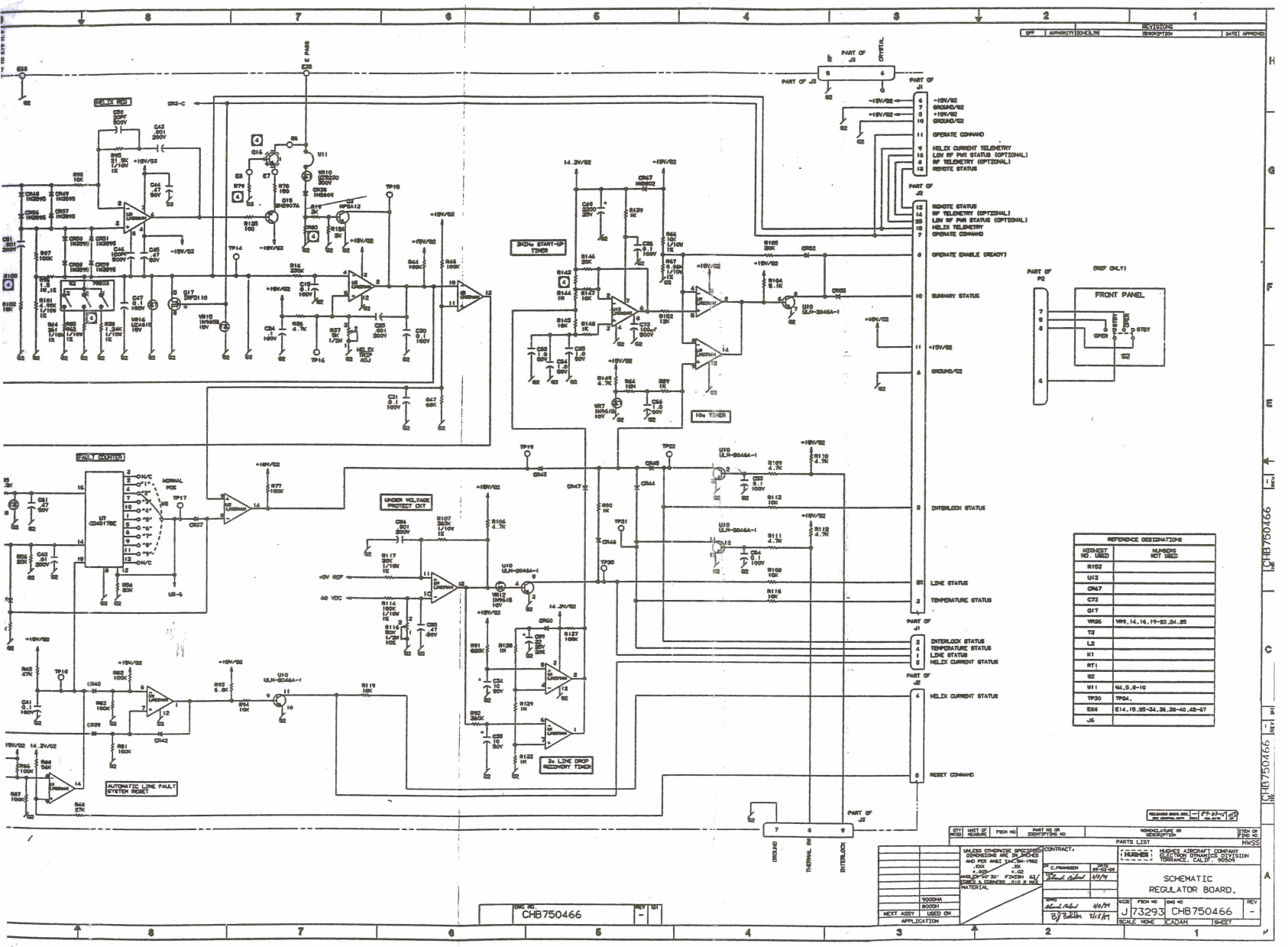

REFERENCE DESIGNATIONS	
HIGHEST NO. USED	NUMBERS NOT USED
R152	
U13	
CR47	
C73	
Q17	
VR26	VR9,14,16,19-23,24,25
T2	
L2	
K1	
RT1	
S2	
W11	W4,5,6-10
TP30	TP24.
E66	E14,15,25-34,36,38-40,42-67
J6	

REVISIONS				
SYM	AUTHORITY	SCHED. TR	DESCRIPTION	DATE / APPROVED

QTY REQD	UNIT OF MEASURE	FICH NO	PART NO OR IDENTIFYING NO	NOMENCLATURE OR DESCRIPTION	ITEM OR FIND NO
				PARTS LIST	MWSS

UNLESS OTHERWISE SPECIFIED DIMENSIONS ARE IN INCHES AND PER ANSI Y14.5M-1982
.XXX ±.005
.XX ±.02
ANGLES ±0°30'
FINISH 63
EDGES & CORNERS .010 R MAX
MATERIAL

CONTRACT:

HUGHES — HUGHES AIRCRAFT COMPANY ELECTRON DYNAMICS DIVISION TORRANCE, CALIF. 90509

DR C.FRANSEN — DATE 88-02-09

APPD 4/6/89 — 4/6/89 — 4/5/89

SCHEMATIC
REGULATOR BOARD.

SIZE J — FICH NO 73293 — DWG NO CHB750466 — REV -

SCALE NONE — CADAM — SHEET

1000HA
8000H

NEXT ASSY — USED ON

APPLICATION